SALES DRAWING SALES DRAWING SALES DRAWING

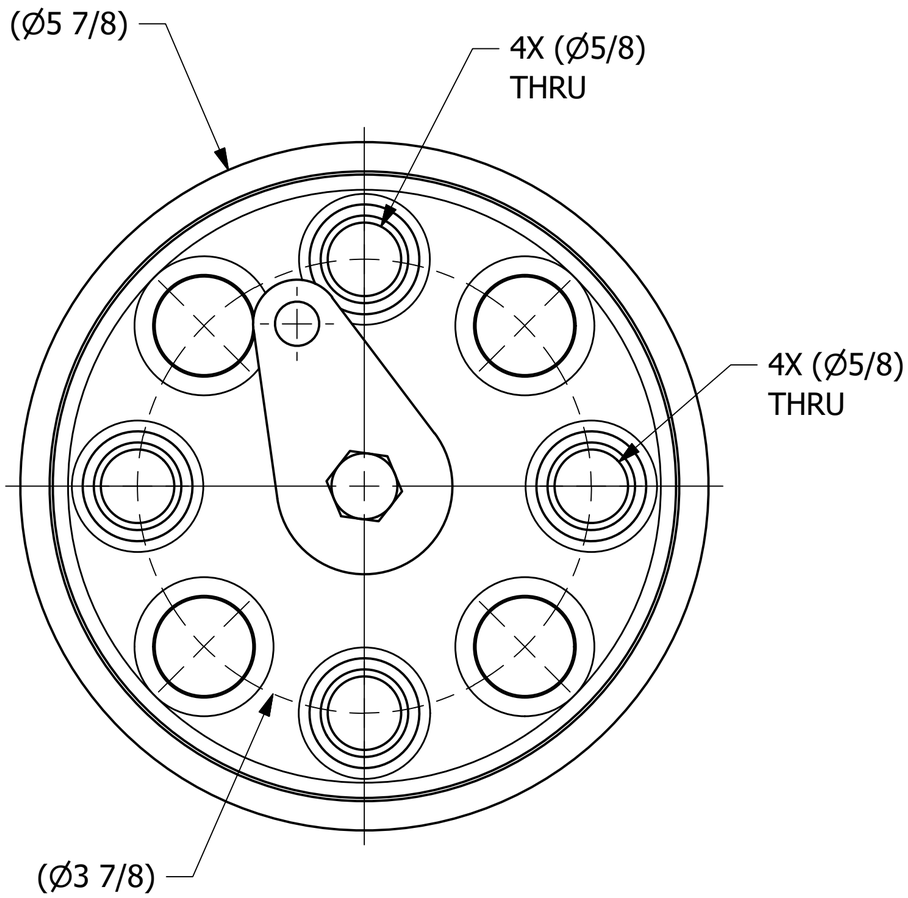

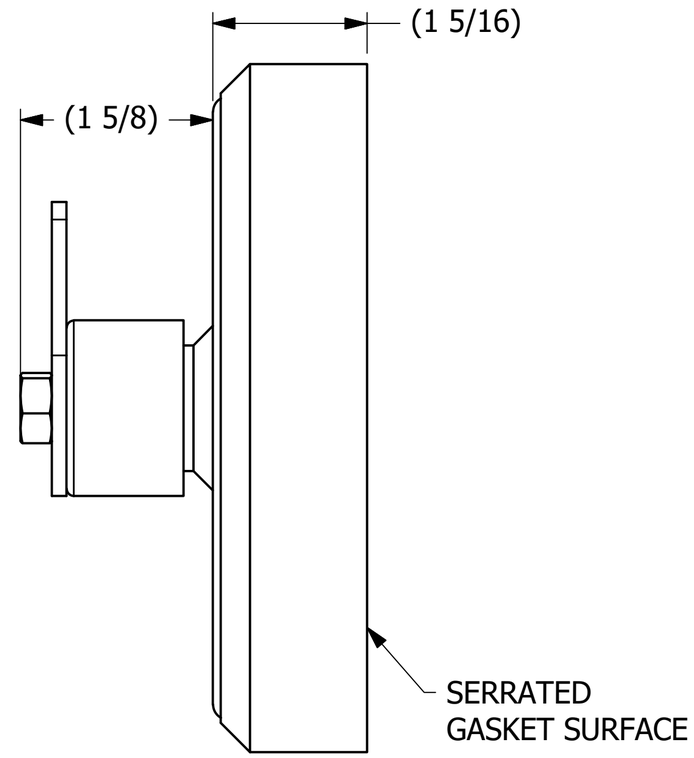

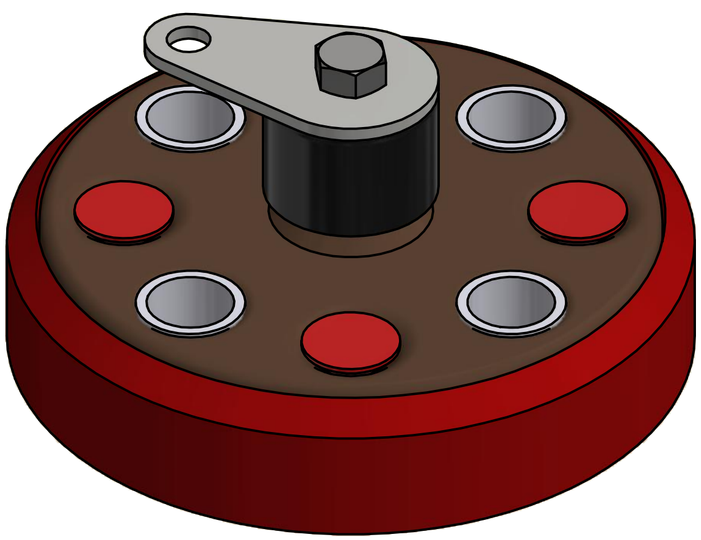

ISOMETRIC VIEW

REV	BY	DATE	REF #	PUB
C	WEB	7/6/22	202207060806	WEB

UNLESS OTHERWISE SPECIFIED DIMENSIONAL TOLERANCES
FRACTIONAL: ±1/16
X.XX: ±.03
X.XXX: ±.015
ANGLE: ±1°
DEBURR ALL SHARP EDGES. ALL MACHINED SURFACES TO HAVE A 125 RMS FINISH UNLESS NOTED OTHERWISE.
THIRD ANGLE PROJECTION

DRAWN BY:	TAK
CHECKED BY:	EJF
PROTOTYPE DATE:	2/2/2018
APPROVED FOR PRODUCTION BY:	EJF
PRODUCTION DATE:	2/23/2018
SIZE:	C
DRAWING #:	46594

SALCO PRODUCTS, INC.

PART NAME: BLIND FLANGE 1 1/2" 150 LB LINED

MATERIAL: SALCO PE/CS/SS/PVDF

PROJECT #: H180129 | SHEET #: 1 OF 1 | SCALE: 1 : 1

PART #: HS15150BFDFPE

THIS PRINT, PROPERTY OF SALCO PRODUCTS INC, CONTAINS PROPRIETARY INFORMATION AND MUST NOT BE COPIED, REPRODUCED, OR USED DETRIMENTALLY TO OUR INTEREST.