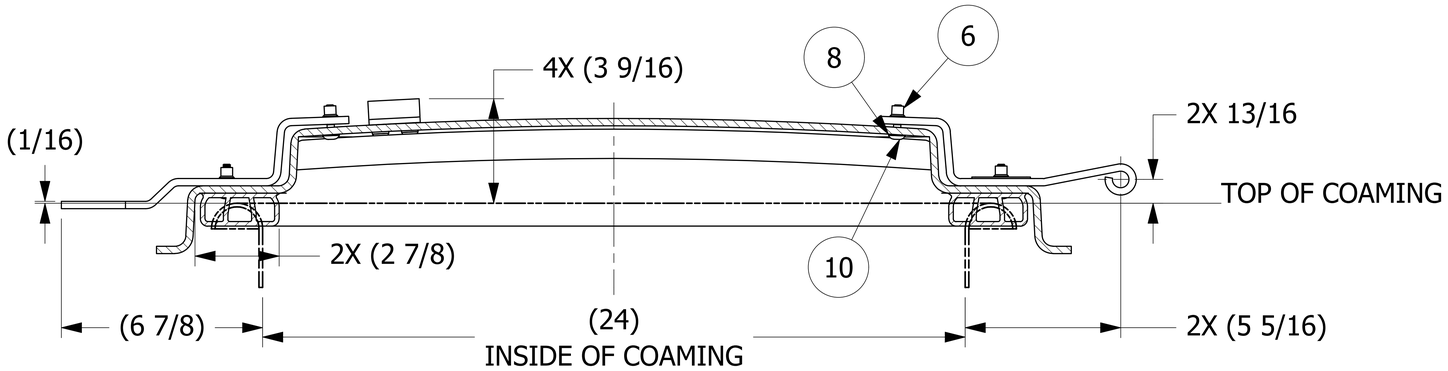

SECTION A-A
SCALE 1:2

NO.	PART NAME	PART#	REQ'D
1	TAG A54417	A54417	1
2	HOLDDOWN BAR 4" SS	HCD0-944-0SS00	1
3	HINGE 4" SS	HCH0-444-0SS00	2
4	BUMPER 13/16" SS	HCU0-723-0SS00	4
5	GASKET ENDCAP 1" X 2 3/4"	THCCE01	2
6	RIVET COLLAR 1/4"	THCCS01	20
7	GASKET 1" X 2 3/4"	THCGE01	23 FT
8	RIVET GASKET 1/4"	THCRE01	20
9	TROUGH HATCH COVER 11' ROUND END	THCRE2411	1
10	RIVET 1/4"	THCRS01	20
11	ADHESIVE (NOT SHOWN)	THCBA01	1

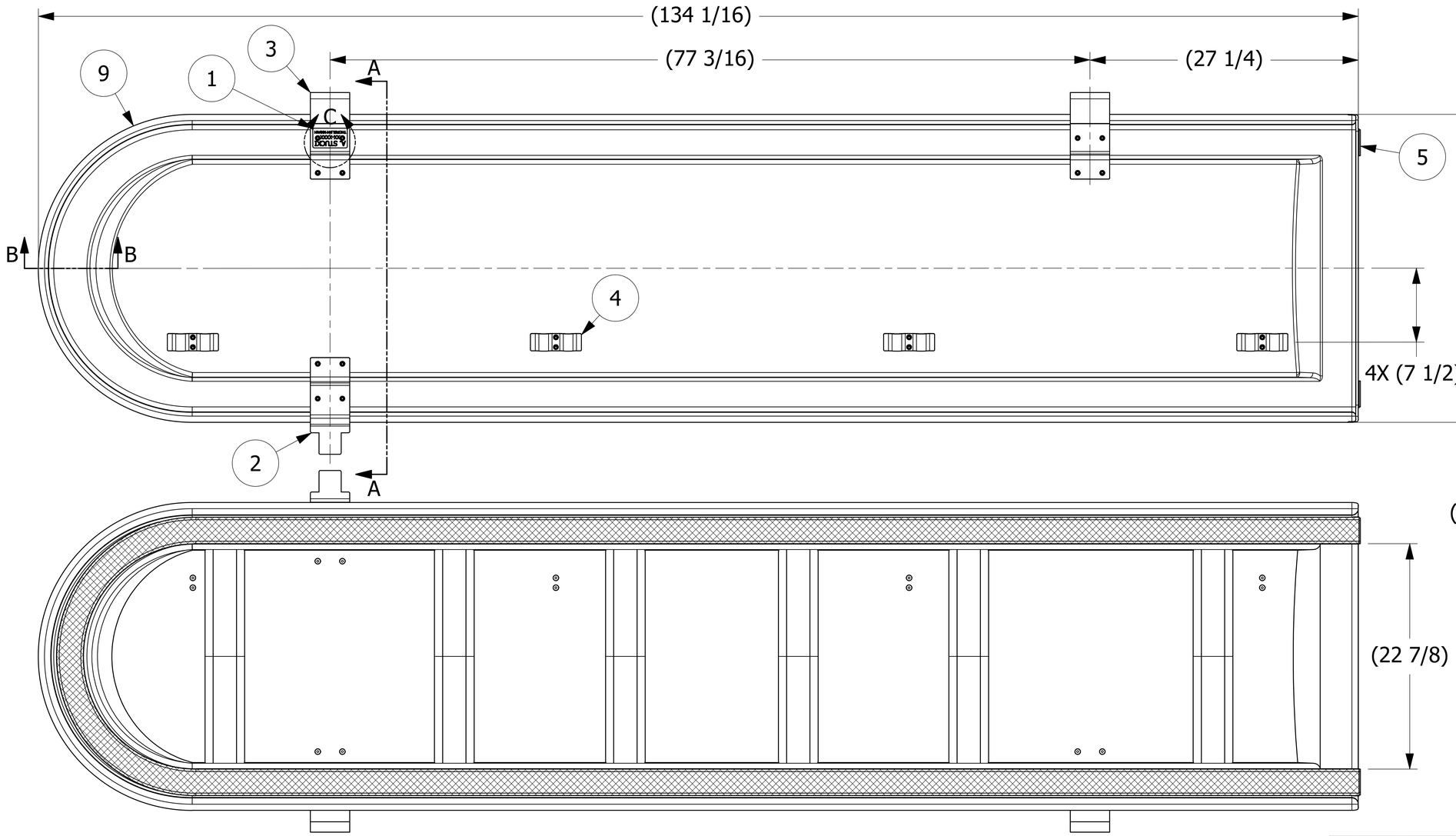

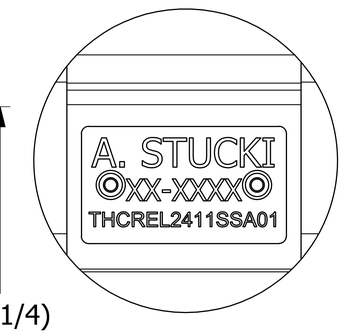

DETAIL C
SCALE 1 : 1

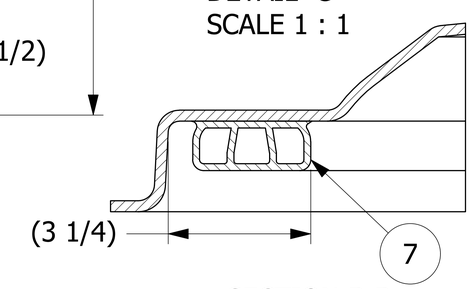

SECTION B-B
SCALE 3:4

SALES DRAWING SALES DRAWING SALES DRAWING

REV	BY	DATE	REF #	PUB
A	WEB	2/24/25	202502241004	WEB

UNLESS OTHERWISE SPECIFIED DIMENSIONAL TOLERANCES
FRACTIONAL: ±1/16
X.XX: ±.03
X.XXX: ±.015
ANGULAR: ±1°
DEBURR ALL SHARP EDGES. ALL MACHINED SURFACES TO HAVE A 125 RMS FINISH UNLESS NOTED OTHERWISE.
THIRD ANGLE PROJECTION

DRAWN BY:	CHL
CHECKED BY:	VD
PROTOTYPE DATE:	10/1/2024
APPROVED FOR PRODUCTION BY:	EJF
PRODUCTION DATE:	2/24/2025
SIZE:	E
DRAWING #:	54200

SALCO PRODUCTS, INC.

PART NAME: TROUGH HATCH COVER 11' ROUND END LEFT

MATERIAL: FIBERGLASS/SS/BLACK EPDM

PROJECT #: S210923 | SHEET #: 1 OF 1 | SCALE: 7:32

PART #: THCREL2411SSA01

THIS PRINT, PROPERTY OF SALCO PRODUCTS INC, CONTAINS PROPRIETARY INFORMATION AND MUST NOT BE COPIED, REPRODUCED, OR USED DETRIMENTALLY TO OUR INTEREST.