SALES DRAWING SALES DRAWING SALES DRAWING

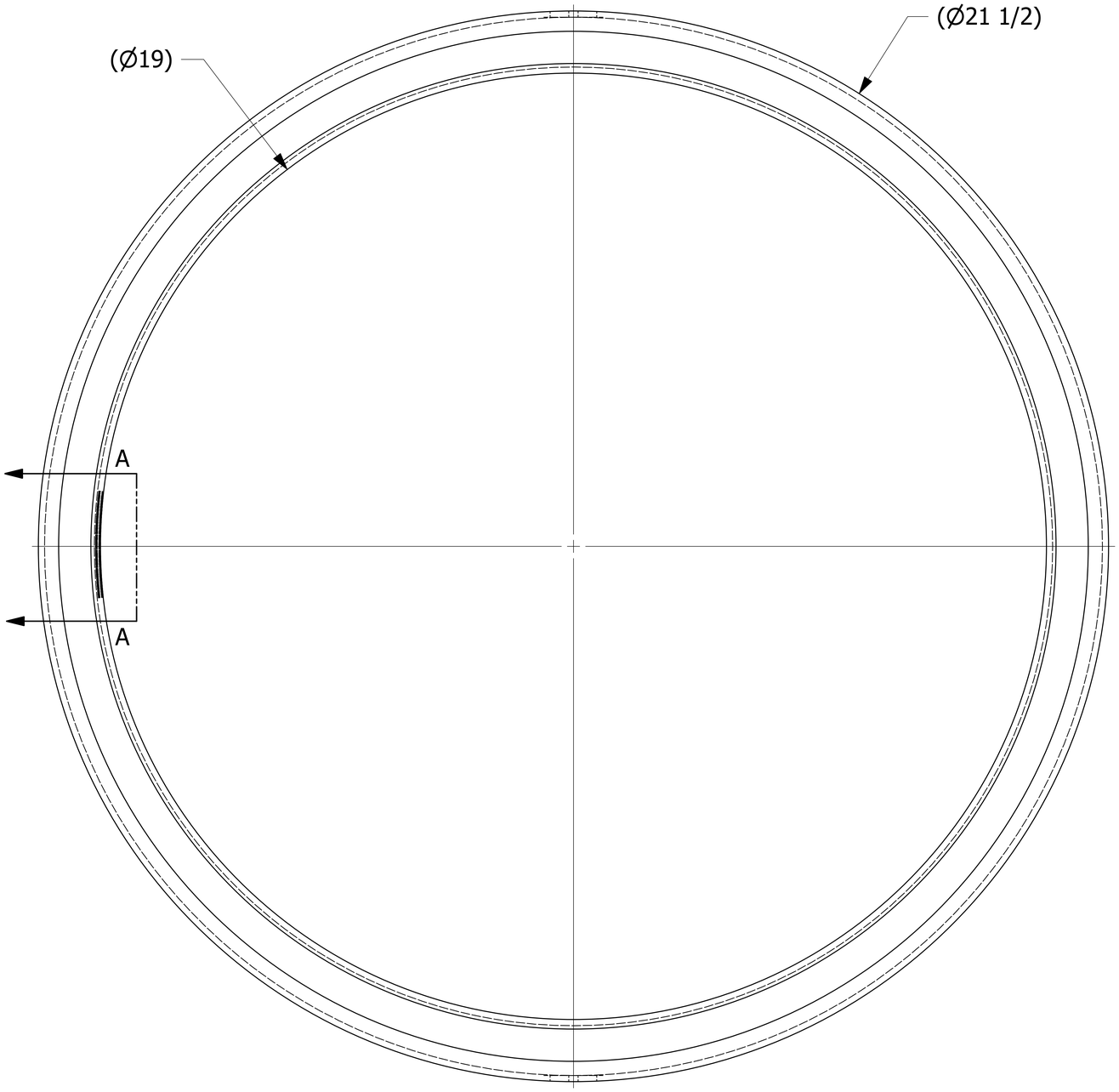

SALCO PRODUCTS
PART # TC20BG1NG30
MATERIAL: EPDM PEROXIDE CURED
PATENTS:
WWW.SALCOPRODUCTS.COM/LEGAL

SECTION A-A
SCALE 3 : 1

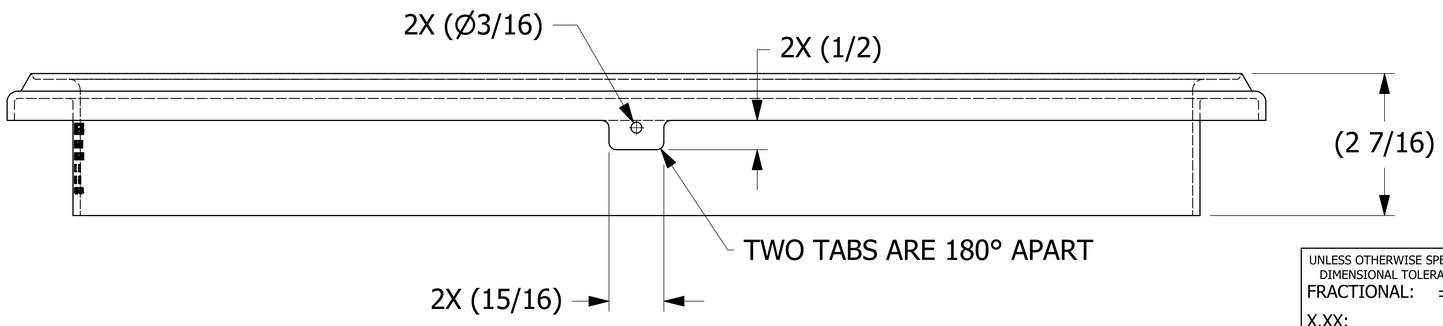

NOTE:
GASKET MATERIAL IS BLUE EPDM PEROXIDE CURED DURO 75±5 SHORE A

REV	BY	DATE	REF #	PUB
C	WEB	5/25/22	202205251512	WEB

UNLESS OTHERWISE SPECIFIED DIMENSIONAL TOLERANCES
FRACTIONAL: ±1/16
X.XX: ±.03
X.XXX: ±.015
ANGULAR: ±1°
DEBURR ALL SHARP EDGES. ALL MACHINED SURFACES TO HAVE A 125 RMS FINISH UNLESS NOTED OTHERWISE.
THIRD ANGLE PROJECTION

DRAWN BY:	ACC
CHECKED BY:	PJG
PROTOTYPE DATE:	
APPROVED FOR PRODUCTION BY:	ACC
PRODUCTION DATE:	11/10/2005
SIZE:	E
DRAWING #:	20186

SALCO PRODUCTS, INC.

PART NAME: MANWAY NOZZLE GASKET 20"

MATERIAL: SEE NOTE

PROJECT #: WAG0223 | SHEET #: 1 OF 1 | SCALE: 1:1

PART #: TC20BG1NG30

THIS PRINT, PROPERTY OF SALCO PRODUCTS INC, CONTAINS PROPRIETARY INFORMATION AND MUST NOT BE COPIED, REPRODUCED, OR USED DETRIMENTALLY TO OUR INTEREST.