SALES DRAWING SALES DRAWING

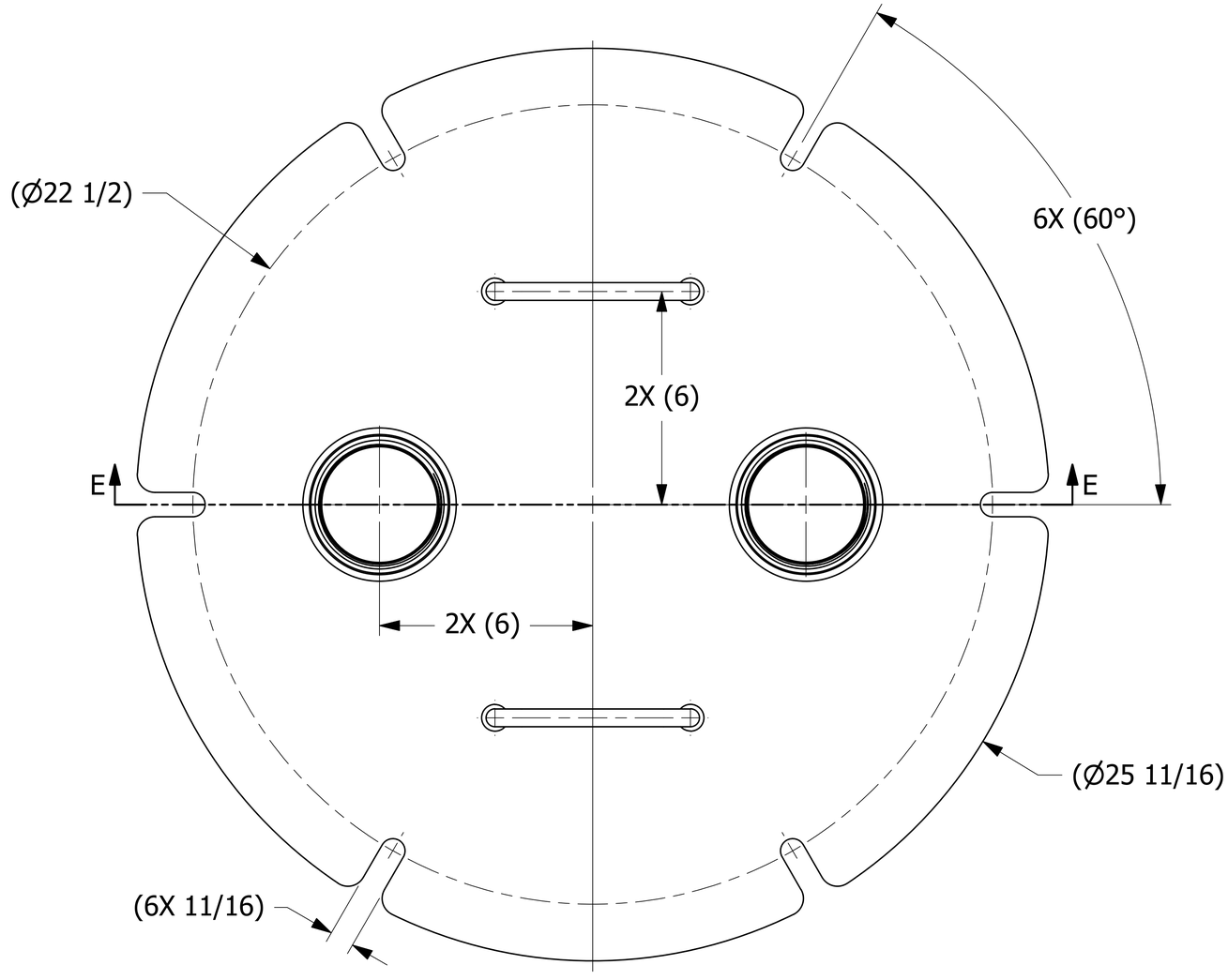

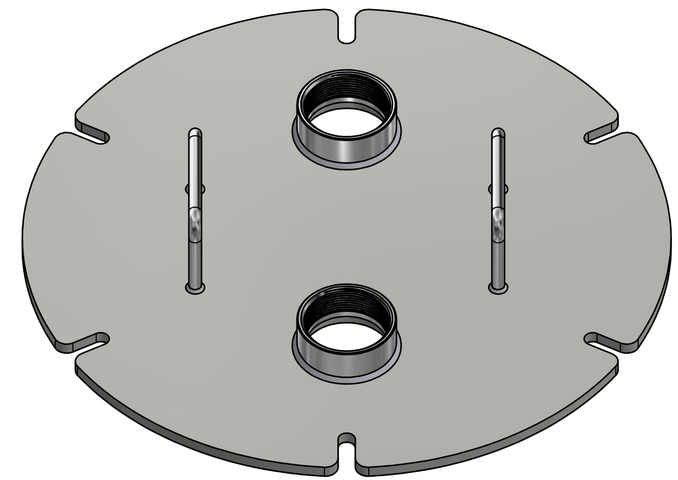

ISOMETRIC VIEW

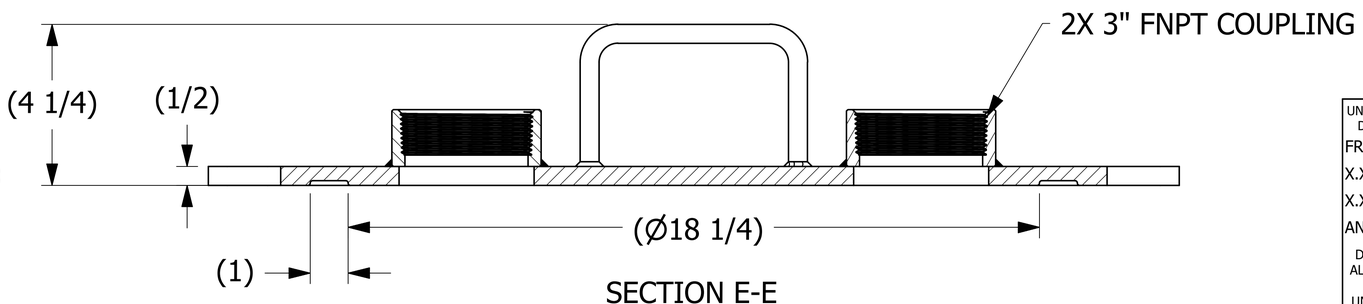

SECTION E-E

REV	BY	DATE	REF #	
B	TAK	2/19/20	202002191539	TAK
				PUB

UNLESS OTHERWISE SPECIFIED DIMENSIONAL TOLERANCES

FRACTIONAL:	±1/16
X.XX:	±.03
X.XXX:	±.015
ANGULAR:	±1°

DEBURR ALL SHARP EDGES. ALL MACHINED SURFACES TO HAVE A 125 RMS FINISH UNLESS NOTED OTHERWISE.

THIRD ANGLE PROJECTION

DRAWN BY:	GS
CHECKED BY:	VD
PROTOTYPE DATE:	10/15/2012
APPROVED FOR PRODUCTION BY:	EJF
PRODUCTION DATE:	5/1/2018
SIZE:	D
DRAWING #:	34352

SALCO PRODUCTS, INC.

PART NAME: MANWAY LOADING PLATE 20"

MATERIAL: ALUMINUM

PROJECT #: 121011 | SHEET #: 1 OF 1 | SCALE: 1:2

PART #: LC203A1A

THIS PRINT, PROPERTY OF SALCO PRODUCTS INC, CONTAINS PROPRIETARY INFORMATION AND MUST NOT BE COPIED, REPRODUCED, OR USED DETRIMENTALLY TO OUR INTEREST.