SALES DRAWING SALES DRAWING SALES DRAWING

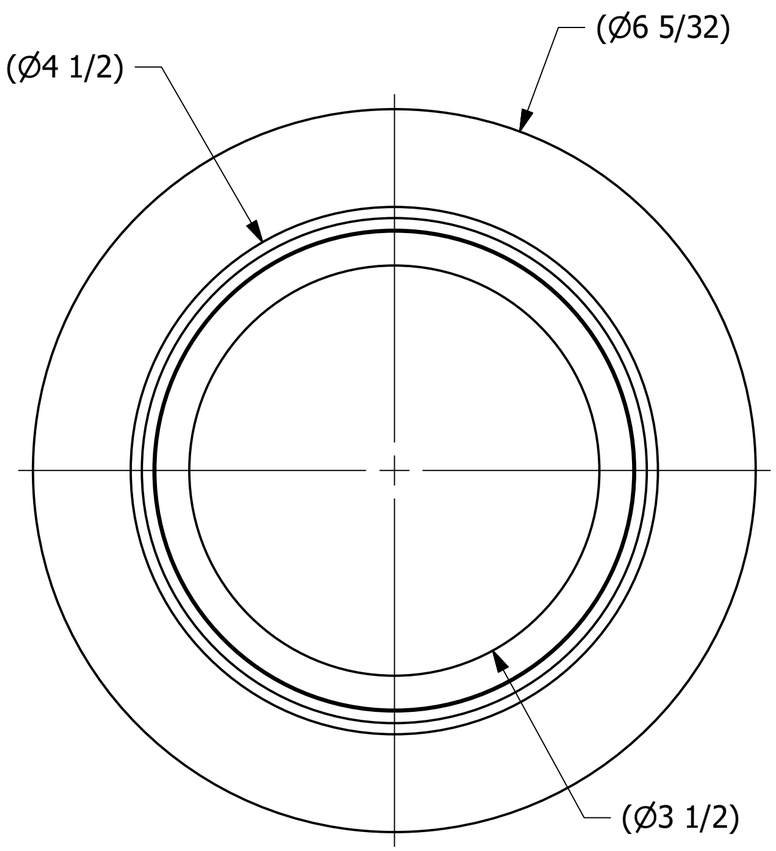

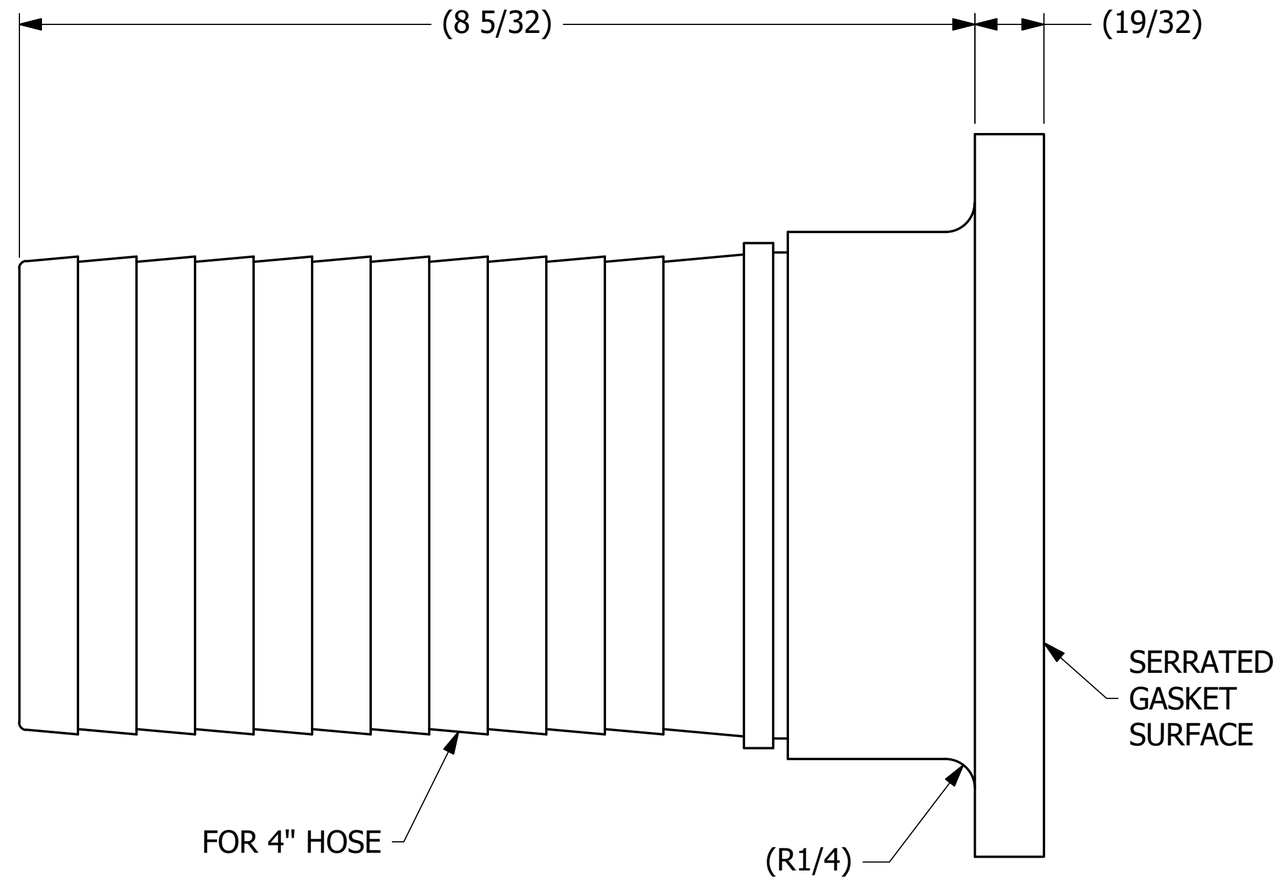

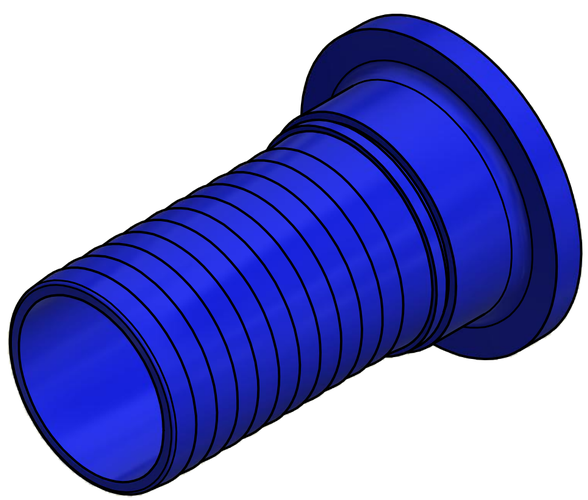

ISOMETRIC VIEW
SCALE 1 : 2

REV	BY	DATE	REF #	PUB
F	CHL	7/13/21	202107131100	CHL

UNLESS OTHERWISE SPECIFIED DIMENSIONAL TOLERANCES
FRACTIONAL: ±1/16
X.XX: ±.03
X.XXX: ±.015
ANGLE: ±1°
DEBURR ALL SHARP EDGES. ALL MACHINED SURFACES TO HAVE A 125 RMS FINISH UNLESS NOTED OTHERWISE.
THIRD ANGLE PROJECTION

DRAWN BY:	ACC
CHECKED BY:	PJG
PROTOTYPE DATE:	2/19/2004
APPROVED FOR PRODUCTION BY:	PJG
PRODUCTION DATE:	2/18/2004
SIZE:	C
DRAWING #:	18891

SALCO PRODUCTS, INC.

PART NAME: HOSE BARB 4"

MATERIAL: SALCO PE

PROJECT #: 030708 | SHEET #: 1 OF 1 | SCALE: 1 : 1

PART #: HS4HBP

THIS PRINT, PROPERTY OF SALCO PRODUCTS INC, CONTAINS PROPRIETARY INFORMATION AND MUST NOT BE COPIED, REPRODUCED, OR USED DETRIMENTALLY TO OUR INTEREST.